Gentner

BC-10B Instruction Sheet

Introduction

The BC-10B Battery Charger is designed to recharge Gentner's portable ALS receivers, RX-1A, Digital 1, Digital 6 (Plus), Venture 1 and Venture 6, as well as the PTX and Venture Express Portable Transmitters, when using AA Ni-Cad(Nickel-Cadmium) or AA Ni-Mh(Nickel-Metal Hydride) rechargeable batteries.

The battery charger is designed with 10 different pockets, each with its own dedicated charging circuit. It can charge from 1 to 10 Gentner units at a time, maintaining adequate charging for each unit.

The BC-10B Battery Charger is designed with microprocessor for high efficiency. Benefits include Overcharge Protection, Charge Status and Smart Charging.

Product Description

The BC-10B (See Figure 1, right) was designed for ease in use. There are no adjustments to make: the unit is plug and play.

1.*Charger Housing.* The BC-10B houses 10 charging pockets for ALS receivers and portable transmitters.
2.*Power Supply.* The AC adaptor plugs into any standard electrical outlet.
3.*Charging Pockets.* Ten slots allow for placement of receivers and/or portable transmitters.
4.*LED.* A dual color LED at each pocket glows red while batteries are charging and glows green when batteries are finished charging.

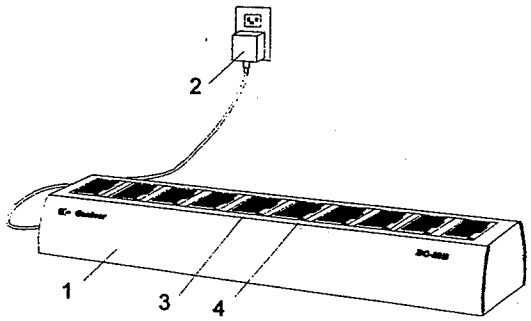

Figure 1. BC-10B

Setup

To set up the BC-10B for operation, perform the following three steps :

Step 1
Place the battery charger on a flat surface.

Step 2
Connect the power-supply cord to the left side of the charger (Figure 1, above).

Step 3
Plug the AC adaptor into a standard electrical outlet.

Operation

To recharge a unit, perform the following two steps:

Step1
Turn the receiver or transmitter OFF before placing it in the battery charger.

Step 2
Firmly place the RX-1A, Digital 1, Digital 6 (plus), Venture 1, Venture 6, PTX, or Venture Express Portable Transmitter inside any available charging pocket (Figure 2, right).

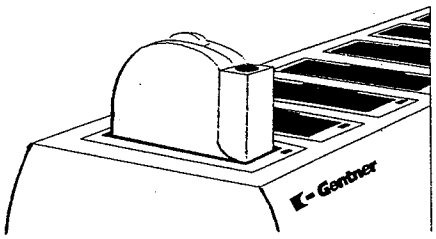

Figure 2. Gentner unit placement

The LED in front of the pocket will glow red, indicating that charging is taking place.

LED NOTE:
If the LED does not light up, ensure that the power supply is plugged firmly into the wall outlet. The jack at the other end of the cord should be tightly connected to the charger. Check for correct battery polarity and press the receiver and/or transmitter firmly into the pocket.

Starin Marketing, Inc • 1531 South Calumet Road • Chesterton, IN 46304 USA • (219)929-4127 • Fax:(219)929-4377 •
www.gentnerals.com • ©2002 ClearOne, Inc. All rights reserved.

Battery Charging Duration

Charging time for fully depleted batteries will depend on battery capacity.

RECHARGING NOTE:
Recharge units using Ni-Cad or Ni-Mh(1300mAH) rechargeable batteries. Alkaline batteries will cause damage to the BC-10B battery charger.

Specifications

Device type
Ten-pocket trickle charger for Gentner portable ALS devices.

Physical Dimensions
18.74"/47.6cm W x 3"/7.62cm H x 5.75"/14.6cm D

Weight
5.16 lbs/2.32kg

Total Charging Current
1700mA

Power Supply
100~240Vac 7.5Vdc @ 1.5A, cULus/GS/CB/CE Approved

Supply Physical Dimensions
3.07"/7.8cm W x 1.26"/3.2cm H x 1.97"/5.0cm D

Power Supply Weight
.352 lbs./160g

Warranty

Starin Marketing Inc., (Manufacturer) warrants that this Assistive Listening System (ALS) product is free of defects in both materials and workmanship. Should any part of this equipment be defective, Manufacturer agrees, at its option, to:

A. Repair or replace any defective ALS product, free of charge (except transportation charges), for a period of one year from the date of the original purchase, provided the owner returns the equipment to the Manufacturer at the address set forth below. No charge will be made for parts or labor during this period;
B. Furnish replacement for any defective ALS product parts in the equipment for a period of one year from the date of original purchase. Replacement parts shall be furnished without charge, except labor and transportation;
C. Repair or replace any defective ALS accessory, free of charge (except transportation charges), for a period of 60 days from the date of the original purchase, provided the owner returns the equipment to the Manufacturer at the address set forth below. No charge will be made for parts or labor during this period.

This Warranty excludes assembled products not manufactured by Manufacturer whether or not they are incorporated in a Manufacturer product or sold under a Manufacturer part or model number.

THIS WARRANTY IS VOID IF:
A. The equipment has been damaged by negligence, accident, act of God or mishandling, or has not been operated in accordance with the procedures described in the operating and technical instructions; or,
B. The equipment has been altered or repaired by other than Manufacturer or an authorized service representative of Manufacturer; or,
C. Adaptations or accessories other than those manufactured or provided by Manufacturer have been made or attached to the equipment which, in the determination of Manufacturer, shall have affected the performance, safety or reliability of the equipment; or,
D. The equipment's original serial number has been modified or removed.

NO OTHER WARRANTY, EXPRESS OR IMPLIED, INCLUDING WARRANTY OF MERCHANTABILITY OR FITNESS FOR ANY PARTICULAR USE, APPLIES TO THE EQUIPMENT, nor is any person or company authorized to assume any warranty for Manufacturer or any other liability in connection with the sale of Manufacturer's products.

Manufacturer does not assume any responsibility for 1) consequential damages, 2) expenses or loss of revenue or property, 3) inconvenience or interruption in operation experienced by the customer due to a malfunction in the purchased equipment. No warranty service performed on any product shall extend the applicable warranty period.

In case of unsatisfactory operation, the purchaser shall promptly notify Manufacturer at the address set forth below in writing, giving full particulars as to the defects or unsatisfactory operation. Upon receipt of such notice, Manufacturer will give instructions respecting the shipment of the equipment, or such other matters as it elects to honor this warranty as above provided. This warranty does not cover damage to the equipment during shipment and Manufacturer assumes no responsibility for such damage. All shipping costs shall be paid by customer. This warranty extends only to the original purchaser and is not assignable or transferable.

Starin Marketing, Inc • 1531 South Calumet Road • Chesterton, IN 46304 USA • (219)929-4127 • Fax:(219)929-4377 •
www.gentnerals.com • ©2002 ClearOne, Inc. All rights reserved.